OSEHRA

Open Source Electronic Health Record Agent

OSEHRA VA Enterprise VistA Project Support

Process Plan and Diagram

Delivered in Fulfillment of SLIN 0002AB
Contract Number: VA116-13-C-0008

October 15, 2013

Revision History

Date	Version	Description	Author
02/08/2013	Draft	Final Draft for Review	Ibáñez
02/11/2013	0.9	Added details on PMAS interactions	Ibáñez
02/13/2013	1.0	Final	Ibáñez
07/31/2013	1.1	Generalizing organizational interactions	Reynolds
10/15/13	1.2	Reformatting	Badt

Contents

1 Executive Summary 4
2 Software Quality Certification 4
1.1 Overview 4
1.2 Interactions with Large-Scale Corporate or Government Development Teams . 4
1.2.1 Standard Workflow 6
1.3 VA-Specific Interactions 7
1.3.1 Standard Workflow 8
1.3.2 Expedited Workflow 9
3 VA Enterprise VistA 10
3.1 FOIA VA Enterprise VistA 12
4 Conclusion 13

1 Executive Summary

This document describes the VA Enterprise VistA repository structure along with the process that OSEHRA is using to properly manage the VA Enterprise VistA repository in a manner consistent with modern open source software practices. In particular, the processes and infrastructure aim to create an environment that will provide safeguards to preserve the integrity of the code and that will integrate with large-scale corporate and governmental software development procedures (using the VA as an exemplar) while still remaining conducive to stimulating the participation of a large scale open community.

2 Software Quality Certification

2.1 Overview

Software quality certification is a method for establishing trust that a code base behaves as intended and that additionally provides mechanisms for maintaining trust as changes are made and new code is added. The underlying purpose of this mechanism is to allow innovative software such as bug fixes, improvements, and new functionality to be brought into the system while allowing users of the system to remain confident that the code base remains safe, compliant and functional. Proper software quality certification is a best practice of open source communities and is critical to the OSEHRA mission of facilitating the development and maintenance of the VistA code base. The certification process is integrated with, and supported by, the *VA Enterprise VistA* infrastructure and forms a gate through which all code contributions must pass.

Here we lay out a procedure for software quality certification of the VistA code base involving patch streams coming from a general large-scale development teams. The first exemplar of such a patch stream is, naturally, the VA. The section, VA-Specific Interactions, details the interaction process with specific explanation of which organization and processes integrate with the *VA Enterprise VistA* process and where.

2.2 Interactions with Large-Scale Corporate or Government Development Teams

The *VA Enterprise VistA* will be updated regularly in order to absorb new VistA code developed by the Contributing Organization (CO) through their Internal Development Processes (IDP). OSEHRA will work in close coordination with the CO to bring new code and VistA patches through the certification process with the ultimate goal of

updating the code base in the *VA Enterprise VistA.* Figure 2-1 below illustrates these interactions.

Both the contributing organization and OSEHRA will identify points of contact (POCs) from each organization. POCs will work closely in order to coordinate the flow of new code through the software quality certification processes. In the remaining of this document they will be referred to as: The OSEHRA Software Quality Certification Point of Contact (SQC-POC) and the Contributing Organization Point of Contact (CO-POC). The following workflows are anticipated.

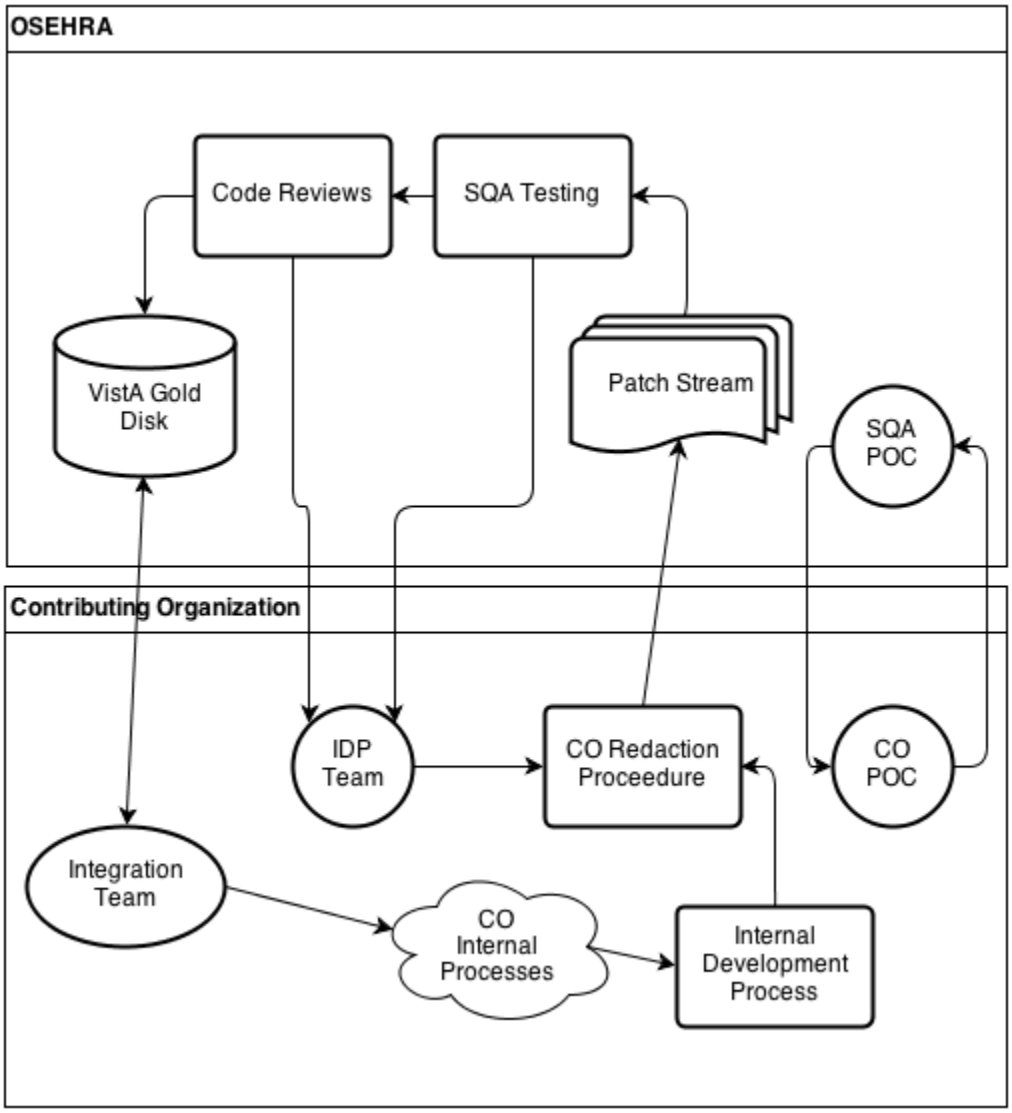

Figure 2-1

2.2.1 Standard Workflow

- As new code projects are anticipated to be released by the contributing organization's IDP, the CO-POC will notify the SQC-POC. This will allow the SQC-POC to plan the allocation of resources required for shepherding the new code through the certification process. The notification will be sent 10 business days before the project is released by the IDP team.
- Upon release of an IDP project, the content of the new code will go through the contributing organizations redaction process, in order to remove any components that are security sensitive, or that are subject to third-party intellectual property.
- Once the new code has been redacted, the CO-POC will notify the SQC-POC and the redacted new code will be submitted to the patch stream input of the OSEHRA Software Quality Certification process.
- Patches entering the stream will be submitted first to SQC Testing. This process involves the execution of:
    - XINDEX verifications
    - All unit tests available in the system
    - Functional tests
- The SQC-POC will notify the CO-POC of any anomalies found during SQC Testing.
- The CO-POC will reconvene with the IDP team and determine whether the anomalies are to be fixed or whether they can be exempted with documented justification.
- If anomalies are to be fixed the IDP team will proceed to remediate the issues, and will resubmit the code to the redaction process, from where it will emerge to again enter the patch stream and will again undergo SQC Testing.
- Code patches that pass the SQC Testing are moved by the OSEHRA certification team into the Code Review evaluation process. This evaluation involves active participation of VA developers along with developers from other government and private organizations. These reviews will follow standard open source practices, in particular regarding transparency and agility.
- Anomalies found during the code review process will be notified by the SQC-POC to the CO-POC. The CO-POC will reconvene with the IDP team and decide whether the issues require remediation or exemption.
- Issues requiring remediation will be addressed by the IDP team, and the remediated patch will be resubmitted to the redaction process, from where it will emerge to enter the path stream towards certification.
- Patches that are approved after Code Reviews will be applied to the VA Enterprise VistA, and will update the reference VistA used for the integration effort, by the integration teams.

2.3 VA-Specific Interactions

The *VA Enterprise VistA* will be updated regularly in order to absorb new VistA code developed by VA-OIT through PMAS processes. OSEHRA will work in close coordination with VA-OIT to bring new code and VistA patches through the certification process with the ultimate goal of updating the code base in the *VA Enterprise VistA.* Figure 3-1 illustrates these interactions.

Both OIT and OSEHRA will identify points of contact (POCs) from each organization. POCs will work closely in order to coordinate the flow of new code through the software quality certification processes. In the remaining of this document they will be referred to as: The OSEHRA Software Quality Assurance Point of Contact (SQC-POC) and the OIT POC. The following workflows are anticipated.

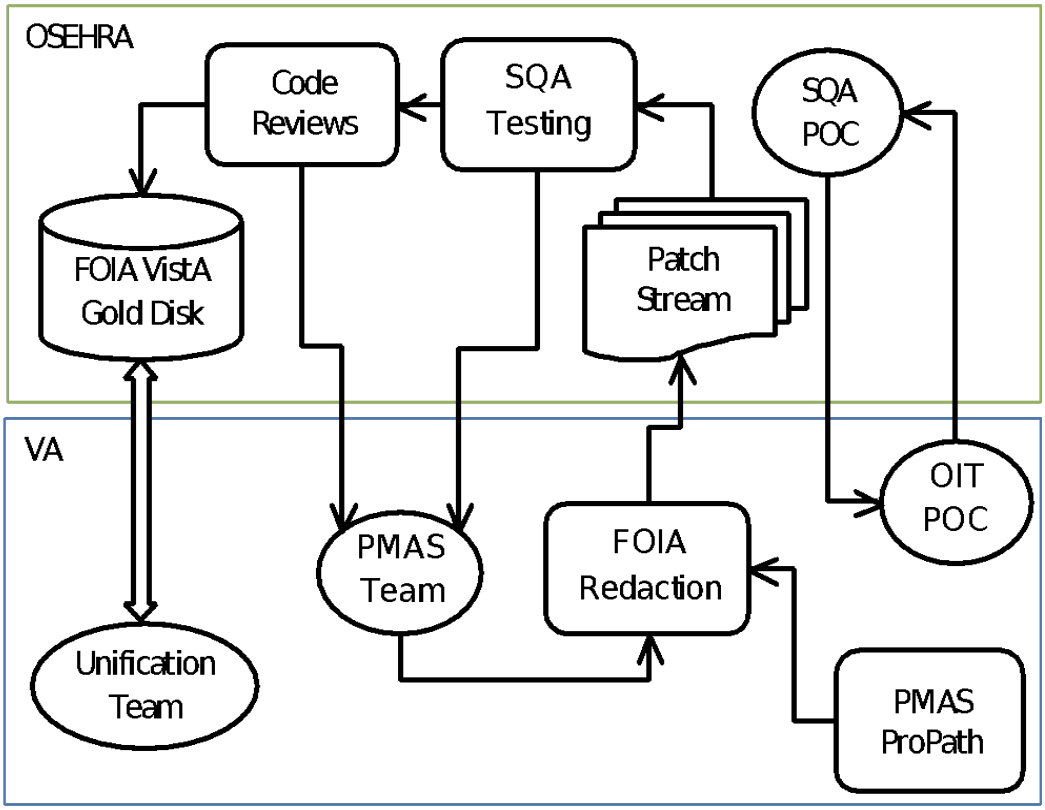

Figure 2-2

2.3.1 Standard Workflow

- As new code projects are anticipated to be released by PMAS projects, the OIT-POC will notify the SQC-POC. This will allow the SQC-POC to plan the allocation of resources required for shepherding the new code through the certification process. The notification will be sent 10 business days before the project is released by PMAS.
- Upon release of a PMAS project, the content of the new code will go through the FOIA redaction process at VA-PD, in order to remove any components that are security sensitive, or that are subject to third party intellectual property.
- Once the new code has been redacted, the OIT-POC will notify the SQC-POC and the redacted new code will be submitted to the patch stream input of the OSEHRA Software Quality Certification process.
- Patches entering the stream will be submitted first to SQC Testing. This process involves the execution of:
    - XINDEX verifications
    - All unit tests available in the system
    - Functional tests
- The SQC-POC will notify the OIT-POC of any anomalies found during SQC Testing.
- The OIT-POC will reconvene with the PMAS team and determine whether the anomalies are to be fixed or whether they can be exempted with documented justification.
- If anomalies are to be fixed the PMAS team will proceed to remediate the issues, and will resubmit the code to the FOIA Redaction process, from where it will emerge to again enter the patch stream and will again undergo SQC Testing.
- Code patches that pass the SQC Testing are moved by the OSEHRA certification team into the Code Review evaluation process. This evaluation involves active participation of VA developers along with developers from other government and private organizations. These reviews will follow standard open source practices, in particular regarding transparency and agility.
- Anomalies found during the code review process will be notified by the SQC-POC to the OIT-POC. The OIT-POC will reconvene with the PMAS team and decide whether the issues require remediation or exemption.
- Issues requiring remediation will be addressed by the PMAS team, and the remediated patch will be resubmitted to the FOIA redaction process, from where it will emerge to enter the path stream towards certification.

- Patches that are approved after Code Reviews will be applied to the FOIA VA Enterprise VistA, and will update the reference VistA used for the unification effort, by the unification teams.

2.3.2 Expedited Workflow

Given the critical nature of VistA, an alternative path is anticipated for patches that are intended to address patient safety issues, security problems, or any other time-critical issue.

- The OIT-POC will notify the SQC-POC of the appearance of a time-critical patch.
- The SQC-POC will allocate resources to process the incoming time-critical patch in an expedited manner.
- At the discretion of the VA, the critical patch will be distributed to clinical sites.
- The patch will be identified for being revisited as it flows through the OSEHRA certification process.
- VA-PD will expedite the patch through the FOIA redaction process.
- Once properly redacted, the patch will be sent to OSEHRA, and will be put at the front of the priority queue of the patch stream.
- Dependencies on other patches will be identified, in order to ensure that prerequisite patches are evaluated along with the critical one.
- The patch will be put through the SQC Testing and any anomalies will be notified to OIT-POC.
- OIT-POC will work with the PMAS team to expedite the remediation of issues in the patch, and resubmit it to the FOIA redaction process.
- Once the patch passes SQC Testing, it will be put in a fast track for Code Reviews.
- The VA will designate experienced developers to perform code reviews of critical patches. They will work in close coordination with the SQC-POC.
- Issues found during the Code Review process will be notified by SQC-POC to OIT-POC, who in turn with reconvene with the PMAS Team working on the patch.
- Issues will be remediated or exempted, and the patch will be resubmitted to the FOIA redaction process, from there it will go to SQC Testing, and upon successful testing, it will continue to Code Review.
- Patches that pass the Code Review will be applied to the FOIA VA Enterprise VistA, to update the reference used by the unification teams.
- Since the original patch was already distributed to the sites, it may have undergone subsequent modifications as it was revised during the certification process. The SQC-POC will coordinate with the OIT-POC to notify the unification

teams about the patch that was deployed, but now may need modification. The Unification teams will work with the sites in order to unify the deployed patch.

This process should facilitate the release of critical patches in order for them to be distributed to the clinical sites with minimal delays; simultaneously, those same patches flow through an expedited path in the certification process. This path requires the same levels of quality as the standard path. The main difference is that these critical patches will be given high priority with respect to non-critical patches that may already be in the patch stream.

3 VA Enterprise VistA

VistA programs, versions, and instances are complex and dynamic requiring a "*VA Enterprise VistA*" infrastructure to define a reference VistA for any given organization. In this context, a *VA Enterprise VistA* is implemented as a coordinated collection of elements including a pair of Git repositories tied together by a reference VistA instance running behind the scenes:

- A "*VistA Patches*" repository holds a patch stream to be applied to live VistA instances via Kernel Installation and Distribution System (KIDS)
- A "*VistA M*" repository holds a representation of M database components extracted from a live reference VistA instance after patches are applied

This infrastructure is illustrated in Figure 3-1 below:

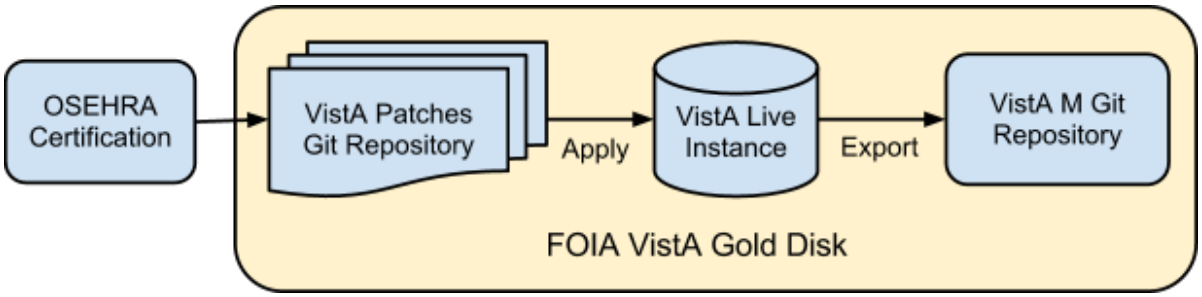

Figure 3-1

The *Vista Patches* stream (left in Figure 3-1) is composed of a sequence of KIDS files, similar to the distribution mechanism currently used inside of the VA. These patches are stored by OSEHRA in a Git repository for the purpose of providing basic version control,

archival and retrieval, and are not expected to be modified through the update mechanisms of the Git repository.

The Patches enter the *VistA Patches Git Repository* exclusively through the gate of the *OSEHRA Certification* processes, as illustrated on the left of Figure 3-1 above. On a regular basis, the KIDS patches will be applied to the *VistA Live Instance*, in order to reconstruct a consistent version of VistA containing the cumulated collection of VA patches.

The M Routine files and Globals from the *VistA Live Instance* will be exported on a continuous basis to a "*VistA M Git Repository"* as illustrated on the right side of Figure 3-1. The purpose of this Git repository is to expose the code to the larger community and facilitate the inspection and understanding of changes that have been pushed into the *VistA Live Instance* via the sequence of KIDS patches from the *VistA Patches Git Repository*. The *VistA M Git Repository* will not take in any modifications, other than the ones resulting from the process of exporting routines and globals from the *VistA Live Instance*.

Developers can initiate work on projects by forking code from the *VistA M Git Repository*, and making changes and additions to their corresponding forks. In order to integrate such modifications back into the code base, the developers can submit their modifications in the form of KIDS patches to the *OSEHRA Certification* process, and if approved, the patches will enter the Patch Stream of the *VistA Patches Git Repository*.

With this general organization in mind, consider Figure 3-2 below, which provides a conceptual overview of the proposed processes, infrastructure components, and interactions among participants. Within the figure, two different VA Enterprise VistAs are represented, corresponding to the FOIA VA Enterprise VistA and to the OSEHRA VistA Community Disk. The FOIA VistA Gold disk represents the VA VA Enterprise VistA and can only be modified through approved VA processes. Similarly, the OSEHRA VistA Community Disk represents the open source community VA Enterprise VistA and can be modified by community-generated patches after obtaining consensus.

3.1 FOIA VA Enterprise VistA

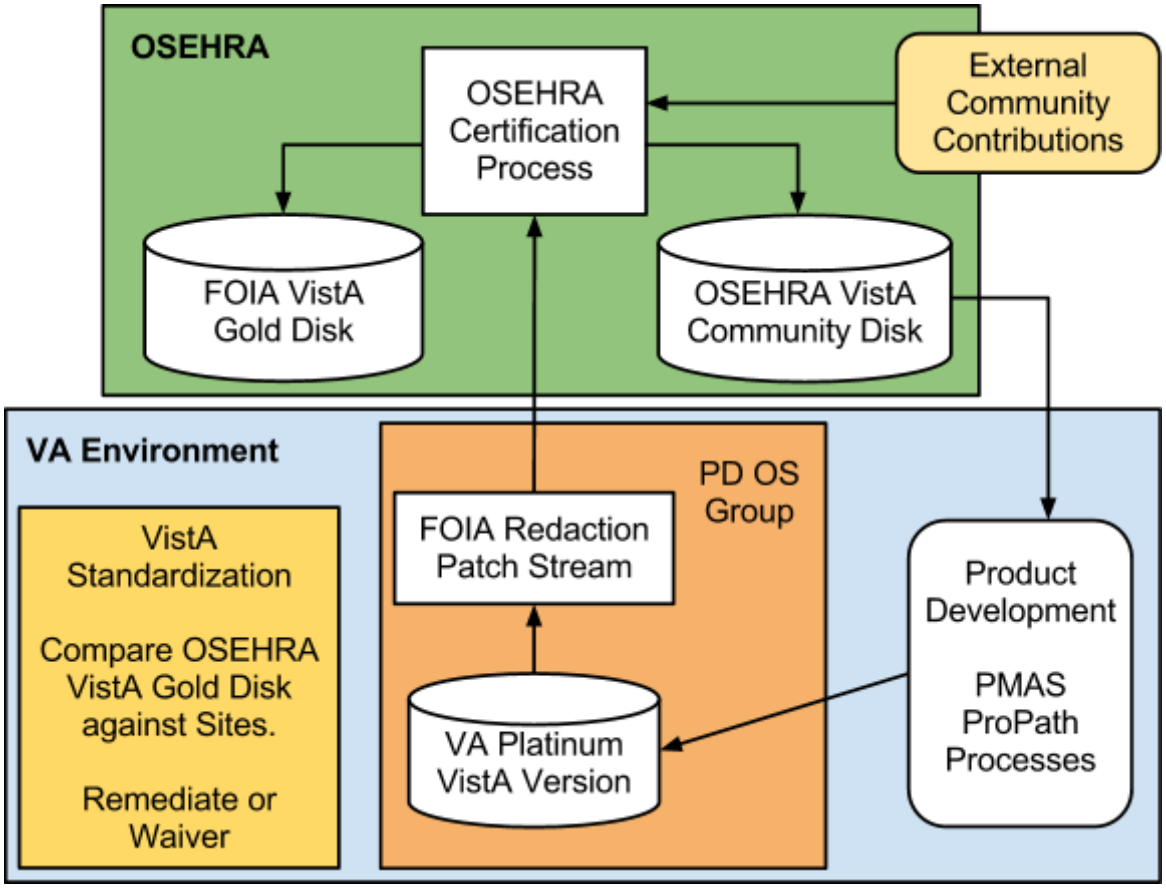

Figure 3-2

The *FOIA VA Enterprise VistA* (upper left of Figure 3-2) is the reference version of VistA hosted by OSEHRA that matches the *VA Platinum VistA version*, except for those portions that are removed during the *FOIA Redaction* process (center of the diagram in Figure 3-2).

The collection of KIDS patches in the *VistA Patches Git Repository* is the aggregation of KIDS patches being generated by the VA. This will ensure that the *VistA Live Instance* of the *VA Enterprise VistA* will match the content of the *VA Platinum VistA version* minus the pieces removed during the *FOIA Redaction* process.

All of the resources hosted and maintained by OSEHRA will be publicly available for reading, copying and redistribution. Proper quality control procedures will be put in place, through the Certification process, to protect the integrity of the code base as new modification are brought into the code base from the VA.

4 Conclusion

The combined infrastructure described in this document provides an effective balance between the needs of preserving the integrity of the code, and the needs for facilitating the rapid innovation cycle that is characteristic of open source software development. We outline a framework for including contributions from the VA as well as any other organization that wishes to contribute to their respective VA Enterprise VistA.